HOMES BY FAIRCROFT

HOME CONSULTANT
Crystal Collins
Call Us @ 346-527-0025
ccollins@faircroft.com



Single Family

Plan 2361

Hunters Crossing 60's

Centered on a 17' x 16' family room with adjacent kitchen and dining nook, this plan offers generous living space. Four bedrooms include a 17' x 12' primary suite with walk-in closet, complemented by three full baths. A mud room adds organization, while the oversized 22' x 15' covered patio creates the perfect setting for outdoor entertaining. An excellent choice for multi-generational living or frequent hosts.

For more details or to express interest, contact us today!

Priced From
$449,900

3 Elevations Available

- **4** Bedrooms
- **3** Bathrooms
- **2,361+** Sq. Ft.
- **2** Car Garage







All square footage is approximate. Renderings are artist's conceptions and may vary slightly from the actual home. Homes may be built in reverse of plans shown, depending on site conditions. Minor architectural changes may be made occasionally at the option of the builder. Please contact your Sales Consultant for details.

HOMES BY FAIRCROFT

HOME CONSULTANT
Crystal Collins
Call Us @ 346-527-0025
ccollins@faircroft.com

Elevation 2361 B



All square footage is approximate. Renderings are artist's conceptions and may vary slightly from the actual home. Homes may be built in reverse of plans shown, depending on site conditions. Minor architectural changes may be made occasionally at the option of the builder. Please contact your Sales Consultant for details.

HOMES BY FAIRCROFT

HOME CONSULTANT
Crystal Collins
Call Us @ 346-527-0025
ccollins@faircroft.com

Elevation 2361 B Options

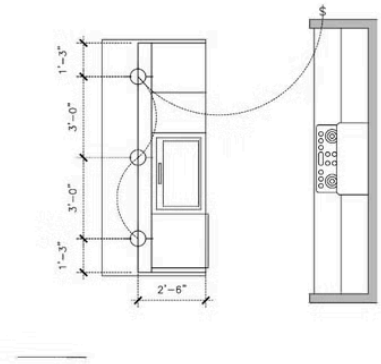

A KITCHEN (OPT.)

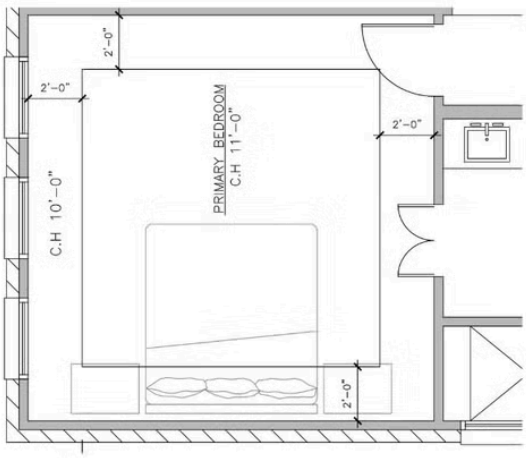

B PRIMARY BEDROOM

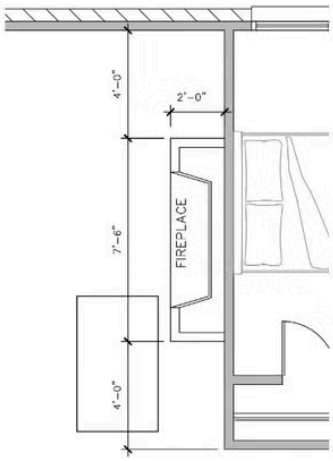

C FIREPLACE (OPT.)

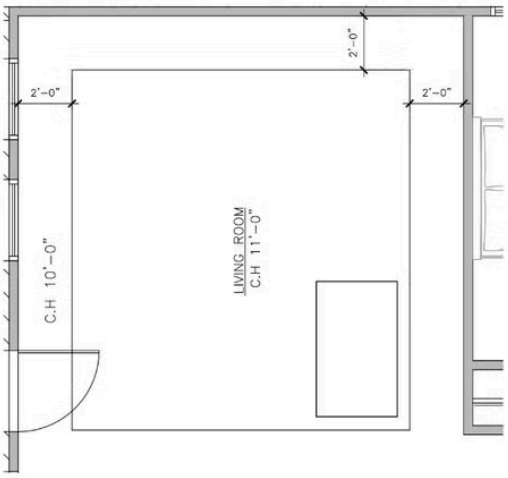

D LIVING ROOM (OPT.)

All square footage is approximate. Renderings are artist's conceptions and may vary slightly from the actual home. Homes may be built in reverse of plans shown, depending on site conditions. Minor architectural changes may be made occasionally at the option of the builder. Please contact your Sales Consultant for details.

HOMES BY FAIRCROFT

HOME CONSULTANT
Crystal Collins
Call Us @ 346-527-0025
ccollins@faircroft.com

Elevation 2361 C



All square footage is approximate. Renderings are artist's conceptions and may vary slightly from the actual home. Homes may be built in reverse of plans shown, depending on site conditions. Minor architectural changes may be made occasionally at the option of the builder. Please contact your Sales Consultant for details.

HOMES BY FAIRCROFT

HOME CONSULTANT
Crystal Collins
Call Us @ 346-527-0025
ccollins@faircroft.com

Elevation 2361 C Options

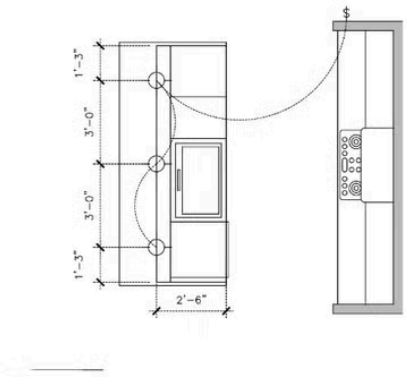

A KITCHEN (OPT.)

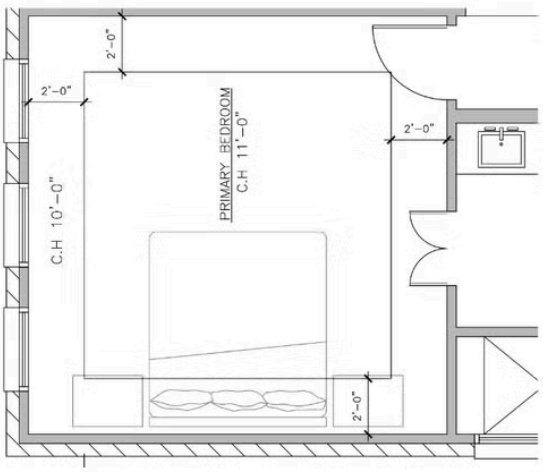

B PRIMARY BEDROOM

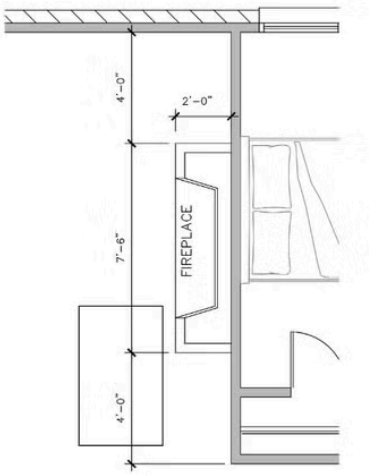

C FIREPLACE (OPT.)

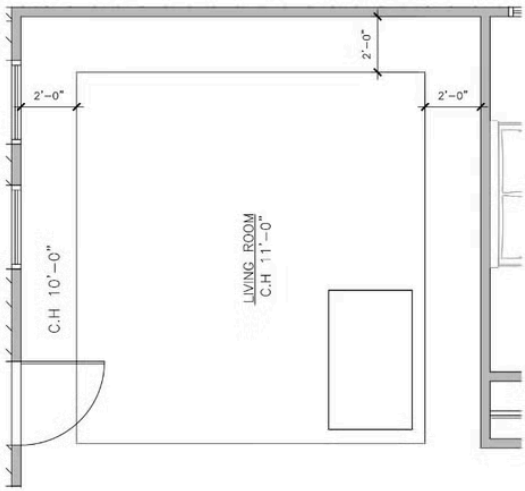

D LIVING ROOM (OPT.)

All square footage is approximate. Renderings are artist’s conceptions and may vary slightly from the actual home. Homes may be built in reverse of plans shown, depending on site conditions. Minor architectural changes may be made occasionally at the option of the builder. Please contact your Sales Consultant for details.